BOKS 4



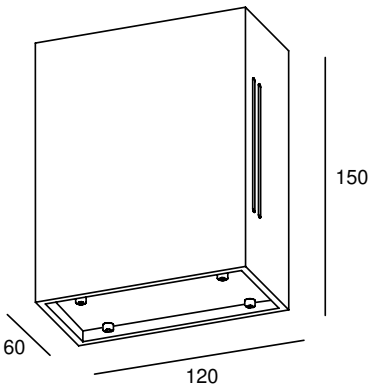

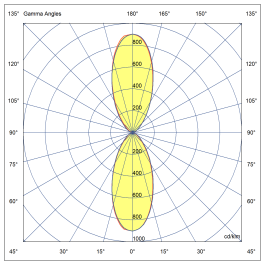

POWERLED(S)	4 x 5 Watt incl.	**BEAM ANGLE**	120°
CRI	90+	**VOLTAGE**	230 VAC
GEAR / DRIVER	230 VAC LED	**MATERIAL**	Aluminium
WEIGHT (KG)	0,93	**IP**	65

SPECIAL: Alu brushed on request

MODELS

	ARTICLE N°	DESCRIPTION	COLOUR	KELVIN	LUMEN
	**016142132702**	BOKS 4 WALL EXT. WARM WHITE	BLACK STRUC.	2700	1960
	016142133002	BOKS 4 WALL EXT. WARM WHITE	BLACK STRUC.	3000	2000
	016142134002	BOKS 4 WALL EXT. NATURAL WHITE	BLACK STRUC.	4000	2100
	**016142132701**	BOKS 4 WALL EXT. WARM WHITE	WHITE STRUC.	2700	1960
	016142133001	BOKS 4 WALL EXT. WARM WHITE	WHITE STRUC.	3000	2000
	016142134001	BOKS 4 WALL EXT. NATURAL WHITE	WHITE STRUC.	4000	2100
	**016142132703**	BOKS 4 WALL EXT. WARM WHITE	ANY RAL	2700	1960
	016142133003	BOKS 4 WALL EXT. WARM WHITE	ANY RAL	3000	2000
	016142134003	BOKS 4 WALL EXT. NATURAL WHITE	ANY RAL	4000	2100