MODEL 8 ENDCAP SKAB PROFILE 8 X 6



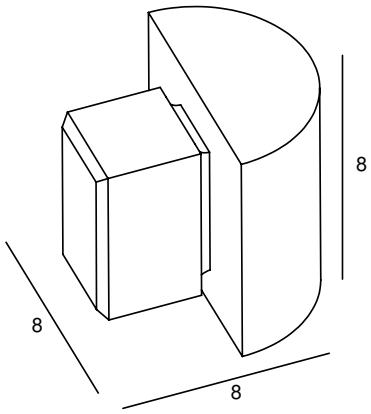

MATERIAL	PLA

SPECIAL: Black or clear available on request

MODELS

	ARTICLE N°	DESCRIPTION	COLOUR	SIZE
	**003081258001**	MODEL 8 ENDCAP SKAB PROFILE 8 X 6	WHITE	NO HOLE
	**003081258101**	MODEL 8 ENDCAP SKAB PROFILE 8 X 6	WHITE	WITH HOLE