MODEL 8 ENDCAP SKAB PROFILE 8 X 6

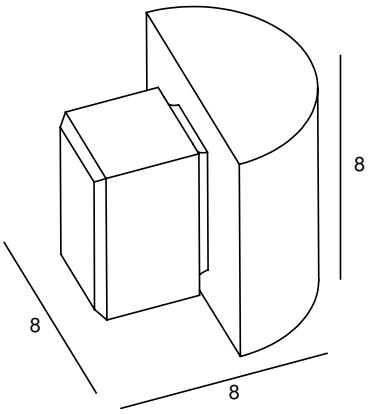

MATERIAL	PLA

SPECIAL: Black or clear available on request

MODELS

	ARTICLE N°	DESCRIPTION	COLOUR	SIZE
	003081258001	MODEL 8 ENDCAP SKAB PROFILE 8 X 6	WHITE	NO HOLE
	003081258101	MODEL 8 ENDCAP SKAB PROFILE 8 X 6	WHITE	WITH HOLE