LUMO DOWN



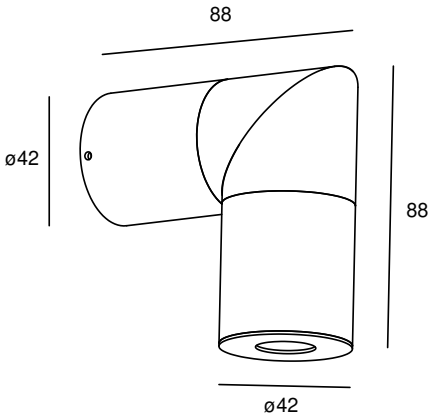

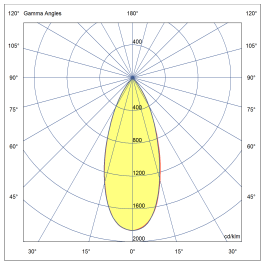

POWERLED(S)	1 x 5 Watt incl.	**REFLECTOR**	40°
CRI	90+	**VOLTAGE**	230 VAC - 50/60 Hz
GEAR / DRIVER	230 VAC LED	**MATERIAL**	Aluminium
WEIGHT	0,3 KG	**IP**	20

MODELS

	ARTICLE N°	DESCRIPTION	COLOUR	KELVIN	LUMEN
	**001041132702**	LUMO DOWN 5W INT. WARM WHITE	BLACK STRUC.	2700	490
	001041133002	LUMO DOWN 5W INT. WARM WHITE	BLACK STRUC.	3000	500
	001041134002	LUMO DOWN 5W INT. NATURAL WHITE	BLACK STRUC.	4000	525
	**001041132701**	LUMO DOWN 5W INT. WARM WHITE	WHITE STRUC.	2700	490
	001041133001	LUMO DOWN 5W INT. WARM WHITE	WHITE STRUC.	3000	500
	001041134001	LUMO DOWN 5W INT. NATURAL WHITE	WHITE STRUC.	4000	525
	**001041132703**	LUMO DOWN 5W INT. WARM WHITE	ANY RAL	2700	490
	001041133003	LUMO DOWN 5W INT. WARM WHITE	ANY RAL	3000	500
	001041134003	LUMO DOWN 5W INT. NATURAL WHITE	ANY RAL	4000	525