SET OF CEILING BRACKETS FOR LINJA PROFILE



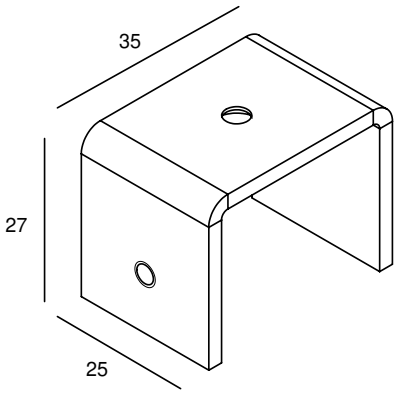

MATERIAL	ALUMINIUM

MODELS

	ARTICLE N°	DESCRIPTION	COLOUR
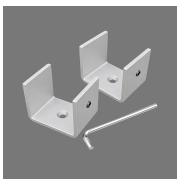	**046018030016**	SET OF CEILING BRACKETS FOR LINJA PROFILE	NATURAL ANODIZED
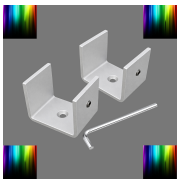	**046018030003**	SET OF CEILING BRACKETS FOR LINJA PROFILE	ANY RAL