ICON

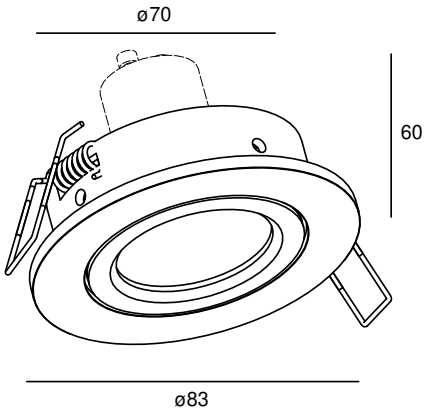

VOLTAGE	230 VAC	**MATERIAL**	Aluminium
WEIGHT (KG)	0,25	**IP**	20
LED BULB GU10	Max. 10 Watt Not included.		

SPECIAL: Aluminum brushed on demand.

MODELS

	ARTICLE N°	DESCRIPTION	COLOUR
	011011210001	ICON INTERIOR	WHITE STRUC.
	011011210003	ICON INTERIOR	ANY RAL